Tooling Trolleys

※COLOR MAY VARY

VTT-2 PACKING
SET / 1 PAPER BOX

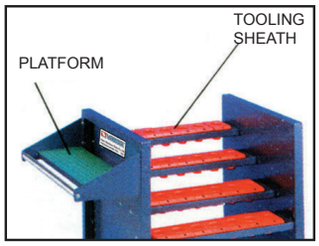

ORDER NO.:VTT-2
WEIGHT:51kgs

ORDER NO.	STD	TOOLING SHEATH CAPACITY	CODE NO.
VTT-2-30	BT-30 DIN 69871A	32 PCS/SET	3405-100
VTT-2-40	BT-40 DIN 69871A	28 PCS/SET	3405-101
VTT-2-50	BT-50 DIN 69871A	20 PCS/SET	3405-102
VTT-2-HSK63	HSK63	24 PCS/SET	3405-103

Overall Size : 1002x650x810 mm
Gray color

VTT-5 PACKING
SET / 3 PAPER BOXES
(2 DRAWERS/BOXES)

ORDER NO.:VTT-5
WEIGHT:64kgs
WITH 2 DRAWERS

ORDER NO.	STD	TOOLING SHEATH CAPACITY	CODE NO.
VTT-5-30	BT-30 DIN 69871A	32 PCS/SET	3405-110
VTT-5-40	BT-40 DIN 69871A	28 PCS/SET	3405-111
VTT-5-50	BT-50 DIN 69871A	20 PCS/SET	3405-112
VTT-5-HSK63	HSK63	24 PCS/SET	3405-113

Overall Size : 1002x650x810 mm
Gray color

VTT-6 PACKING
SET / 2 PAPER BOXES

ORDER NO.:VTT-6
WEIGHT:53kgs
WITH 1 DRAWERS

ORDER NO.	STD	TOOLING SHEATH CAPACITY	CODE NO.
VTT-6-30	BT-30 DIN 69871A	32 PCS/SET	3405-105
VTT-6-40	BT-40 DIN 69871A	28 PCS/SET	3405-106
VTT-6-50	BT-50 DIN 69871A	20 PCS/SET	3405-107
VTT-6-HSK63	HSK63	24 PCS/SET	3405-108

Overall Size : 1002x650x810 mm
Gray color

Tooling Rack

NEW

FOR BT30,40,50 / SK30,40,50
CAT30,40,50 / ISO30,40,50

WITH FOLDING HANDLE

※SHOWS VTTR-40TR

SIZE:604mm(L) / 140mm(W) / 160mm(H)

ORDER NO.	FOR STD	TOOLING SHEATH CAPACITY	WEIGHT (kgs)	CODE NO.
VTTR-30TR	BT30,SK30, CAT30,ISO30	8 PCS	4.0	3405-250
VTTR-40TR	BT40,SK40, CAT40,ISO40	7 PCS	4.0	3405-251
VTTR-50TR	BT50,SK50, CAT50,ISO50	5 PCS	4.0	3405-252

Tooling Sheath

※COLOR MAY VARY

THE BT & DIN OF TAPER ARE SAME.
ORDER NO.: VTTS-BT-30
WEIGHT:0.077kg
CODE NO. 3405-130
SIZE: 48 X138 X 65mm
ORDER NO.: VTTS-BT-40
WEIGHT:0.085kg
CODE NO. 3405-131
SIZE: 63 X 138X 74mm
ORDER NO.: VTTS-BT-50
WEIGHT:0.123kg
CODE NO. 3405-132
SIZE: 93 X 138X 104mm

End Mill Sheath Rack

ORDER NO.VMS-2 CODE NO.3405-050

Material:ABS
with 62 sheaths.
※End mills not included

Unit:mm

CAPACITY RANGE	SIZE	WEIGHT (kg)
Ø6~Ø42	205x205x80	0.4

Cutting Tool Sheath Rack

ORDER NO.VMS-3 CODE NO.3405-051

- For Drill & End Mill Use
- Ø1.0~Ø10.0(Ø1.0,1.1~9.9,10.0)EACH0.1MM ONE POSITION Ø10.5, 10.9, 11.0, 11.5, 11.9, 12.0, 12.5, 12.9, 13.0 TOTAL 100 POSITION FOR DRILL & END MILL
- 360º ROTATION

Unit:mm

CAPACITY RANGE	SIZE	WEIGHT (kg)
Ø1.0~Ø13.0	Ø174x90m/m	0.21

Tooling Rack Stand

ORDER NO.VTC-20 CODE NO. 3405-221

NEW

Example

- Suit for different kind small machine
- Powerful desing
- Compact & with big capacity
- With rubber mate
- 3 size drawer could store
- Different size tools

LxWxH : 460x370x860 mm
VTC-20 3 DRAWERS
1 FLAT TABLE CAN
USING FOR VDG-, VEG, U2, VCF-500 ETC.
STRONG TYPE
WEIGHT: 30.25 KGS

DRAWER:

W x L x H: 330 x 315 x 130 mm

W x L x H: 330 x 315 x 280 mm

Tool Cabinet

ALL THE OVERALL SIZE IS WITH WHEELS HEIGHT.
※COLOR MAY VARY

5 Drawers Roll Cabinet
Cuft: 6.9′
Net Weight: 31.3 kgs
Gross Weight: 34 kgs

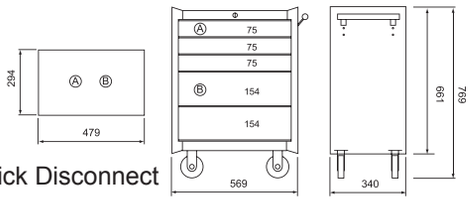

- Ball bearing slide with Quick Disconnect
- Heavy Duty 4″x1″ Caster
- Double wall construction
- Electro - Powder Coating to Resist Scratch & solvent markings
- 10mm Top Mat
- All drawers appended to Drawer Liners
- Red color

※COLOR MAY VARY

ORDER NO.	CODE NO.
VTC-23	3405-144

570WX345DX769Hmm

mm

	W	D	H
DRAWERS	480	292	75
DRAWERS	480	292	154

7 Drawers Roll Cabinet
Cuft: 13′
Net Weight: 67.9 kgs
Gross Weight: 77.5 kgs

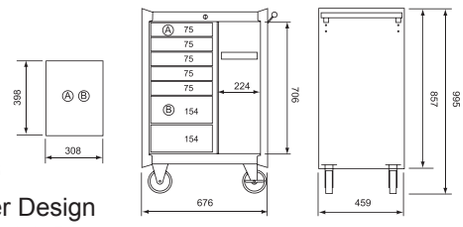

- Ergonomic Large Drawer Design
- Ball bearing slide with Quick Disconnect
- Heavy Duty 5″x2″ Caster
- Double wall construction
- Electro - Powder Coating to Resist Scratch & solvent markings
- 10mm Top Mat
- All drawers appended to Drawer Liners
- Gray color

※COLOR MAY VARY

ORDER NO.	CODE NO.
VTC-25	3405-149

680WX460DX995Hmm

mm

	W	D	H
DRAWERS	308	395	75
DRAWERS	308	395	154

Tooling Trolleys

ORDER NO.VTC-100 CODE NO.3405-154
※COLOR MAY VARY

NEW

WxDxH	873x500x880 mm
Package	1PC/1CTN/2.73CUFT
N.W.	23.91KGS
G.W.	25.90KGS

- Grey color

Workbench

ORDER NO.VWB-1580 CODE NO.3405-158

NEW

SIZE : 1500W x 750D x 800H mm

※COLOR MAY VARY

DESCRIPTION	W	D	H	N.W.	G.W.	CUFT
OVERALL	1500	750	800	69.7	74.04	4.68

Hydro Lift Table

NEW

※COLOR MAY VARY

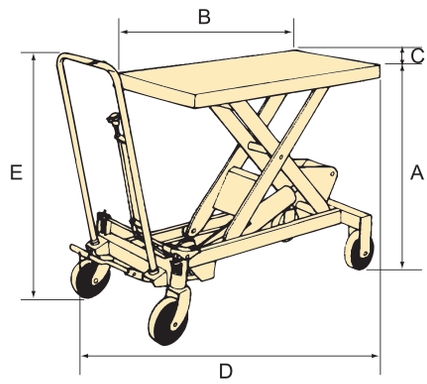

WITHOUT WOODEN CASE

ORDER NO.	A		B	C	D	E		Wheel	Brake Wheel	Load Capacity kgs	Weight	CODE NO.
	MAX. High From The Floor	MIN. Low From The Floor	Worktable Length	Worktable Width	Overall Length	Handle Bar High From The Floor	Overall Width					
VLT-300	900	270	815	500	1020	960	500	127 × 38	1	300	72	3405-170

Hydro Pallet Trolleys

NEW

※COLOR MAY VARY

WITHOUT WOODEN CASE

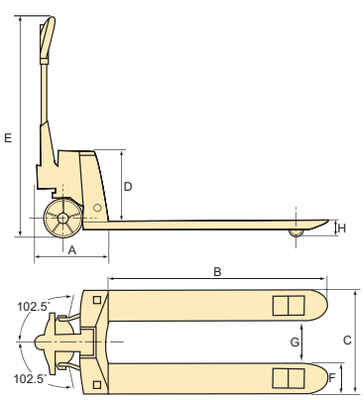

ORDER NO.	Overall Length A+B	Overall Height E	Body(Not Include Fork) A	The Fork Surface width F	Fork width C	Fork Length B	Fork Wide G	MAX. Fork Height	MIN. Fork High From The Floor H	Load Capacity kgs	Weight Kgs	CODE NO.
HPT-20NS	1300	1200	390	160	520	910	200	200	85	2000		3405-181
HPT-20NM	1460	1200	390	160	520	1070	200	200	85	2000		3405-182
HPT-20WL	1610	1200	390	160	685	1220	365	200	85	2000		3405-183

Parts Cabinet

※COLOR MAY VARY

GRAY COLOR

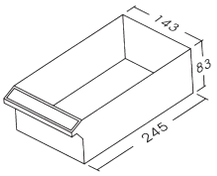

ORDER NO. VA6-212H

THE SIZE OF DRAWER
245D x 143W x 83H (m/m)

ORDER NO. VA6-330H

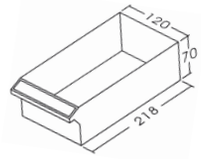

ORDER NO. VA7-324P

THE SIZE OF DRAWER
218D x 120W x 70H (m/m)

ORDER NO. VA7-448P

ORDER NO.	SIZE (mm) W x D x H	DRAWER SIZE(mm)	METAL	DRAWER NUMBERS	WEIGHT(kgs)	CODE NO.
VA6-212H	362 x 265 x 571	245 x 143 x 83	STEEL PLATE COVER WITH ZINC. Drawer material: GPS	12PCS	10.8	3405-200
VA6-330H	533 x 264 x 937	245 x 143 x 83		30PCS	25.3	3405-201
VA7-324P	440 x 222 x 642	218 x 120 x 70		24PCS	15.5	3405-202
VA7-448P	586 x 222 x 937	218 x 120 x 70		48PCS	27.5	3405-203
VA1-525	586 x 222 x 350	218 x 90 x 55		25PCS	10	3405-204
VA1-575	586 x 222 x 937	218 x 90 x 55		75PCS	32.3	3405-205

Tool Box

※COLOR MAY VARY

● COMES IN DIFFERENT COLOR

ORDER NO. VTB-102

ORDER NO. VTB-901

ORDER NO.	SIZE (mm) W x D x H	MATERIAL	WEIGHT(kg)	CODE NO.
VTB-102	420 x 235 x 180	ABS	1.9	3405-300
VTB-901	378 x 182 x 144		0.9	3405-301

Parts Storage

COLOR: RED, BLUE, YELLOW

- Easy parts storage
- Organize

ORDER NO.	SIZE	PACKED	EACH WEIGHT (kg)	CODE NO.
VHB-1218	120Wx180Dx80H mm	60 PCS/CASE	8.6	1021-100
VHB-1525	150Wx250Dx120H mm	36 PCS/CASE	9.6	1021-101
VHB-2035	200Wx350Dx150H mm	18 PCS/CASE	0.585	1021-102
VHB-2045	200Wx450Dx177H mm	12 PCS/CASE	0.8	1021-103
VHB-3045	300Wx450Dx177H mm	8 PCS/CASE	1.8825	1021-104

Economical Pallet

PACKAGE 5PCS / SET

NEW

- Zinc Coating
- For Transport
- Light Weight Duty
- Recyclable
- Disposable: 1 Time Use
- Load: 500 Kgs

ORDER NO.	SIZE	WEIGHT (kgs / 5 sets)	CODE NO.
VEPT-01	1100 x 1400 x 120 mm	85 kgs	3405-601
VEPT-02	1000 x 1100 x 120 mm	55 kgs	3405-602

Heavy Duty Pallet

PACKAGE 5PCS / SET

NEW

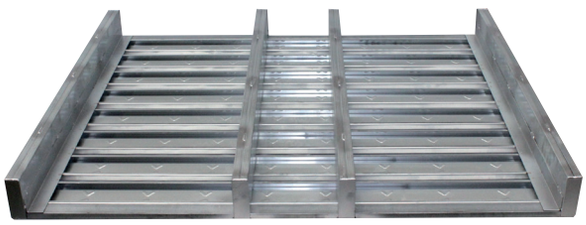

- Heavy Duty
- Zinc Coating
- Material: Steel
- For Transport
- Multiple Use
- Load: 1800 Kgs

ORDER NO.	SIZE	WEIGHT (kgs / 5 sets)	CODE NO.
VHPT-H01	1100 x 1400 x 120 mm	215 kgs	3405-611