Precision Universal Angle Chuck

VERTEX®

With VSC-4 Chuck

NEW PAT.

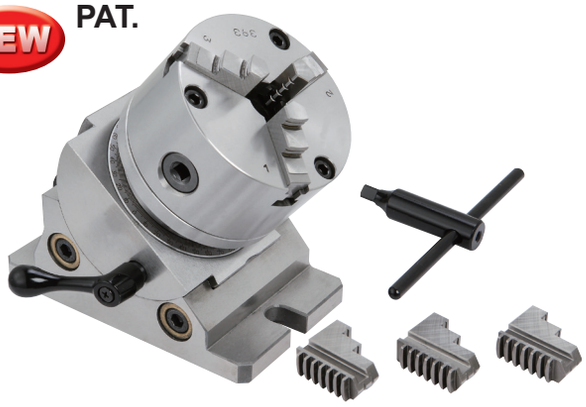

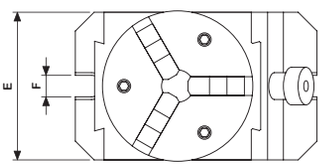

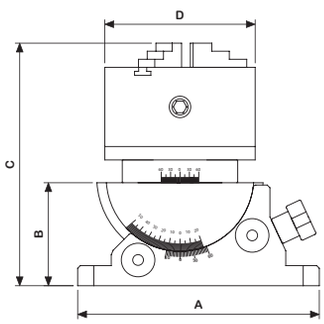

- Precision graduction for accurate reading.
- Its swivelling and tilting features with clamping make this unit well suited for straight or inclined surface, angular driling machining on various machine tools.
- With VSC-4 3-Jaw chuck.
- O.D. clamping Ø3-90 mm,
- I.D. clamping Ø32-84 mm.
- Tolerance ±0.01mm/100mm.
- 2 axis with angle scale
- For angle setting
- Chuck indexing / Rotating setting
- Tilting Features same as VUA series, Page B13.
- Load capacity : 15kgs

LIGHT DUTY

patent PAT.

ORDER NO.	A	B	C	D	E	F	G.W (kgs)	CODE NO.
VUA-100J	180	77	181	112	110	16	14	2003-060

Precision Universal Angle Collet Chuck

NEW Capacity Ø3-Ø30

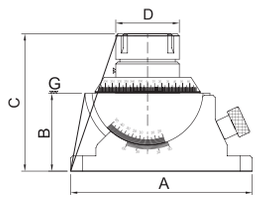

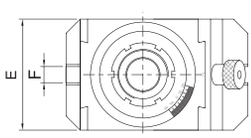

- Precision graduation for accurate reading.
- Its swivelling and tilting features with clamping make this unit for straight or inclined surface, angular drilling machining on various machine tools.
- Tolerance ±0.01 mm / 100 mm.
- 360˚ horizontal swivel, 45˚ vertical tilting.
- Suit for multi - angle cutting.
- Simple way for mass production.
- Hardness : HRC 52˚±2˚
- Load capacity : 15kgs

LIGHT DUTY

patent PAT.

Standard Accessories: With 15pcs ER-40 Collet (4, 5, 6, 8, 10, 12, 13, 15, 16, 18, 20, 21, 22, 25, 26)

ORDER NO.	A	B	C	D	E	F	G.W (kgs)	CODE NO.
VUA-ER40	180	77	136	63	110	16	17.48	2003-065

Optional collet ER-40-Ø 27, 28, 29, 30 mm

Free Angle Table

NEW

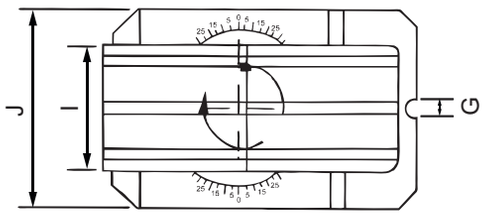

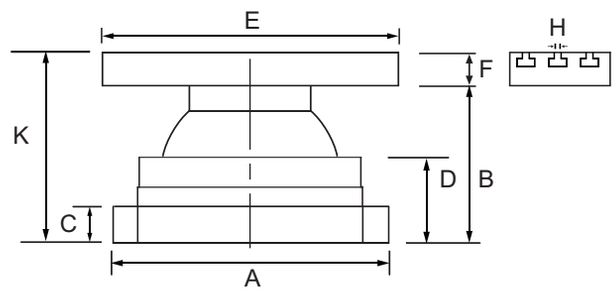

Features:

- Quick setting
- Operating is very quick and easy, can increase so much working effciency than you can image.
- 360º Rotation, Tilting 30º
- For non-normal angle setting.
- Load capacity : 15 kgs
- Its swivelling and tilting features with chuck clamping make this unit for round & square, angular drilling machining on various machine tools or for bench work table.
- Plate is preciely ground.
- For clamping tool vise & many other way of clamping.

ORDER NO.	A	B	C	D	Table size		F	G	H	J	K	G.W (kgs)	CODE NO.
					E	I							
VAV-1020	190	120	20	72	200	100	34	17	12	140	153	15	2003-120
VAV-1325	190	120	20	72	250	126	34	17	12	140	153	17	2003-121

Free Angle Rotary Chuck

NEW

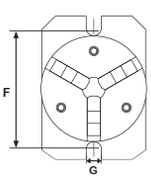

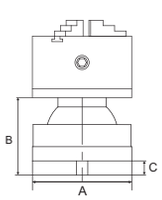

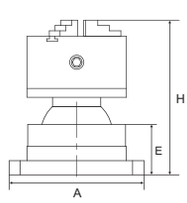

- With VSC-4, VSC-5, 3-JAW Chuck.
- O.D. Clamping ø3-90 mm (VSC-4)
- O.D. Clamping ø3-110 mm (VSC-5)
- I.D. Clamping ø 32-84 mm (VSC-4)
- I.D. Clamping ø 35-100 mm (VSC-5)

Features:

- Quick setting
- Operating is very quick and easy, can increase so much working efficiency than you can image.
- 360˚ Rotation, Tilting 30˚
- For non-normal angle setting.
- Its swivelling and tilting features with chuck clamping make this unit for round & square, angular drilling machining on various machine tools or for bench work table.
- Load capacity : 15 kgs

ORDER NO.	A	B	C	D	E	F	G	H	Weight (kgs)	CODE NO.
VAV-4J	140	120	20	190	72	158	17	203	16	1002-217
VAV-5J	140	120	20	190	72	158	17	203	17	1002-218

Precision Sine Vise

HARDENESS HRC 60˚, SKS3
PARALLELISM 0.003 / 100 mm
SQUARENESS 0.005 / 100 mm

THE CLAMP HANDLE IS PLACED UNDER WORK PIECE.

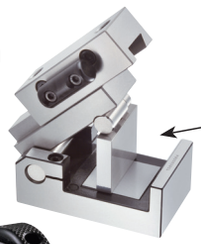

Height Gage Block PAGE B78

●Example

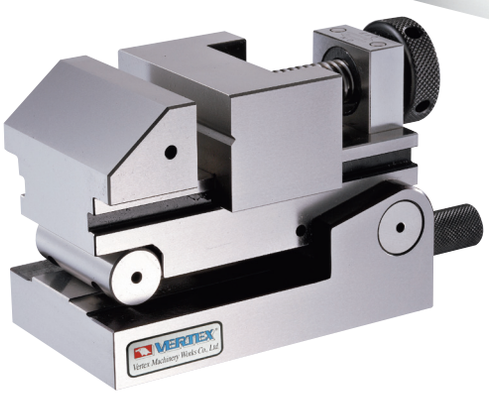

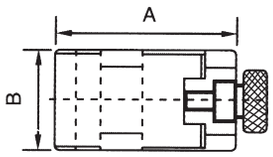

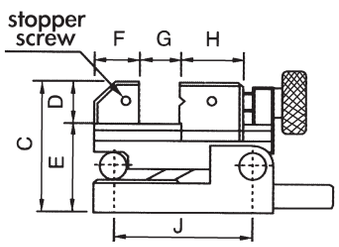

ORDER NO.	CODE NO.
SVC-100	2003-090

Unit:mm

A	130
B	70
C	93
D	30
E	63
F	33
G	45
H	45
I	M5
J	100
Max.angle	46˚
Weight(kgs)	5.5

Precision Sine Vise

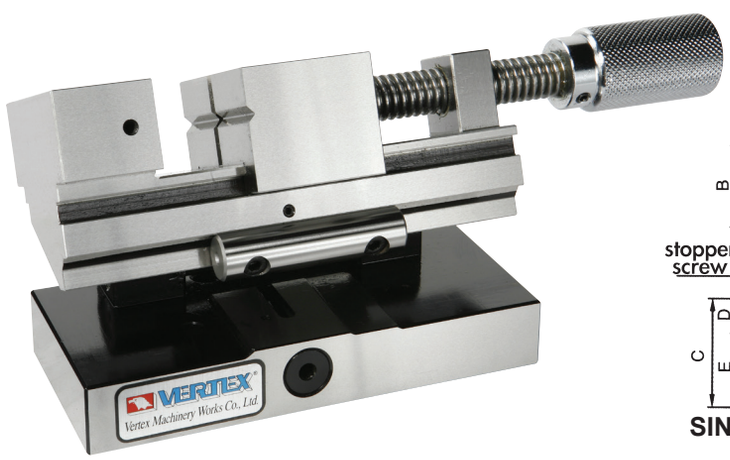

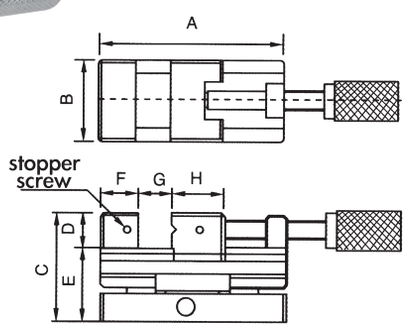

SIN BAR CENTER 50 mm

HARDENESS HRC 60˚, SKS3
PARALLELISM 0.003 / 100 mm
SQUARENESS 0.005 / 100 mm

ORDER NO.	CODE NO.
SVL-50	2003-100

Unit:mm

A	160
B	73
C	93
D	30
E	63
F	33
G	80
H	45
I	M5
Max.angle	46˚
Weight(kgs)	6.6

Two Way Vise

2 WAYS

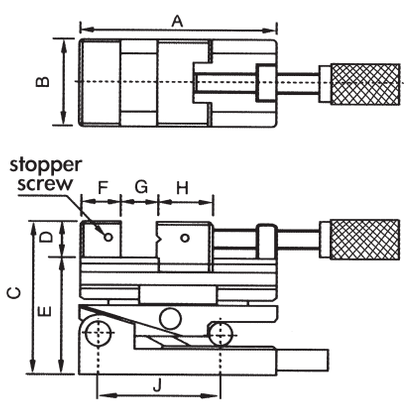

HARDENESS HRC 60˚, SKS3
PARALLELISM 0.003 / 100 mm
SQUARENESS 0.005 / 100 mm

ORDER NO.	CODE NO.
SVS-100	2003-110

Unit:mm

A	160
B	73
C	124
D	30
E	94
F	33
G	80
H	45
I	M5
J	100
Max.angle	46˚
Weight(kgs)	8.3

Sine Bar With Magnetic

There is magnet in the bottom which can be run on any kind of machine for testing angle use.

The thread can for stopper screw

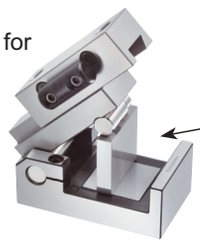

Height Gage Block PAGE B78

●Example

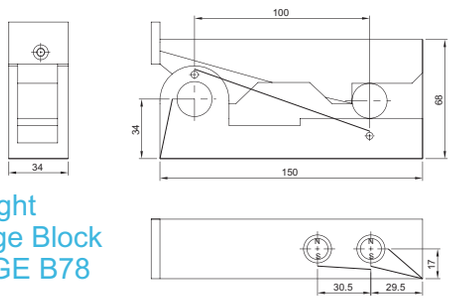

Unit:mm

ORDER NO.	SQUARNESS	ACCURACY	PARALLELISM	HARDENESS	MATERIAL	N.W. (kgs)	CODE NO.
V-S50M	0.005mm /100mm	±0.002	0.002mm/ 100mm	HRC50°	SK-3	0.34	2004-001
V-S100M	0.005mm /100mm	±0.002	0.002mm/ 100mm	HRC50°	SK-3	2.06	2004-002

Sine Bar

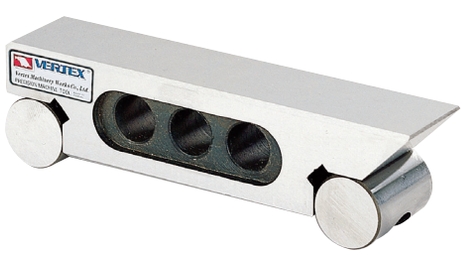

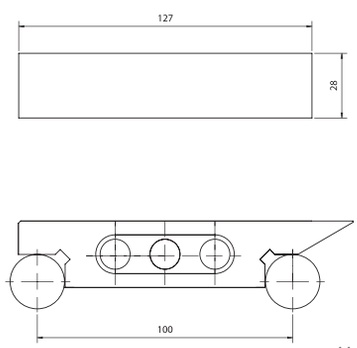

Unit:mm

ORDER NO.	LENGTH	WIDTH	HEIGHT	CENTER DISTANCE	PARALLEL	HARDEN	BLOCKS DIA.	MATERIAL	N.W (kgs)	CODE NO.
VS-100	127	28	35	0.005	0.005/ 100mm	HRC50°	Ø20mm	SK-3	0.76	2004-010

Sine Bar-Inch

Change of the sine angle must be count on sine bar inspection, the bar's tolerance within 0.005 mm / 100 mm

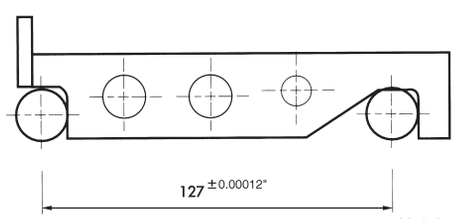

Unit:inch

ORDER NO.	LENGTH	WIDTH	HEIGHT	CENTER DISTANCE	PARALLEL	HARDEN	BLOCKS DIA.	MATERIAL	N.W (kgs)	CODE NO.
V-S25	6-3/8″	1″	1-1/4″	127	0.00012″	HRC52°	3/4″	SK2	1	2004-020
V-S50	6-3/8″	2″	1-1/4″	127	0.00012″	HRC52°	3/4″	SK2	1.8	2004-021

HOW TO CHOOSE THE BLOCK FOR SINE BAR

DISTANCE / GAUGE BLOCK HEIGHT / CAN GET DEGREE	SIN BAR CENTER 50	SIN BAR CENTER 100
2°	1.7405	3.4899
3°	2.6168	5.2336
4°	3.4878	6.9756
5°	4.3578	8.7155
6°	5.2264	10.4528
7°	6.0935	12.1869
8°	6.9587	13.9173
9°	7.8217	15.6434
10°	8.6824	17.3648
11°	9.5404	19.0809
12°	10.3956	20.7911
13°	11.2476	22.4951
14°	12.0961	24.1921
15°	12.9401	25.8819
16°	13.7819	27.5637
17°	14.6186	29.2371
18°	15.4058	30.9017
19°	16.2784	32.5586
20°	17.1010	34.2020
21°	17.9184	35.8367
22°	18.7303	37.4606
23°	19.5366	39.0713
24°	20.3368	40.6736
25°	21.1309	42.2618
26°	21.9186	43.8371
27°	22.6995	45.3990
28°	23.4736	46.9471
29°	24.2405	48.4809
30°	25.0000	50.0000
31°	25.7519	51.5038
32°	26.4960	52.9919
33°	27.2320	54.4639
34°	27.9596	55.9192
35°	28.6788	57.3576
36°	29.3893	58.7785
37°	30.0908	60.1815
38°	30.7831	61.5661
39°	31.4660	62.9320
40°	32.1394	64.2787
41°	32.8030	65.6059
42°	33.4565	66.9130
43°	34.0999	68.1998
44°	34.7329	69.4658
45°	35.3553	70.7106

EDM Tool Marker Vise (STAINESS)

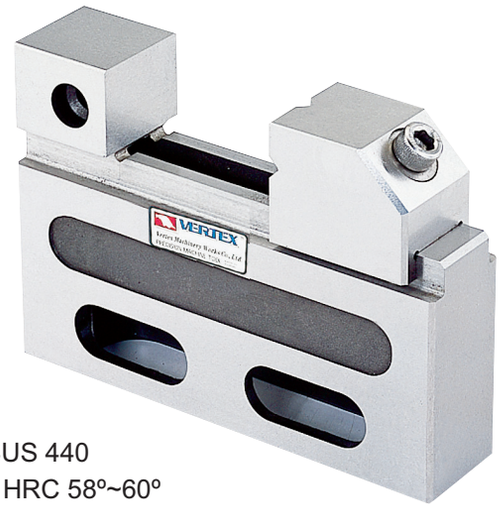

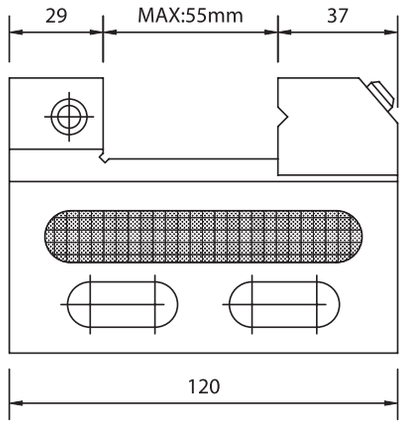

Material: SUS 440
Hardness: HRC 58º~60º
Squareness: Within 0.005 mm
This vise is for wire cutter use. Each of the parts was manufactured by stainless steel and with the appliance of high erosion resisting.
※ Not 100% magnetic proof

PARALLELISM	±0.002 mm / 100 mm
SQUARENESS	±0.002 mm / 100 mm

ORDER NO.	WEIGHT (kgs)	CODE NO.
VSTV-50W	1.4	2008-040

MAX.OPENING	55 mm
THICKNESS	27 mm
JAW DEEP	25 mm
N.W	1.01 kgs
MATERIAL	SUS 440
HARDNESS	HRC 54º±2º

EDM Tool Maker Vise (STAINLESS)

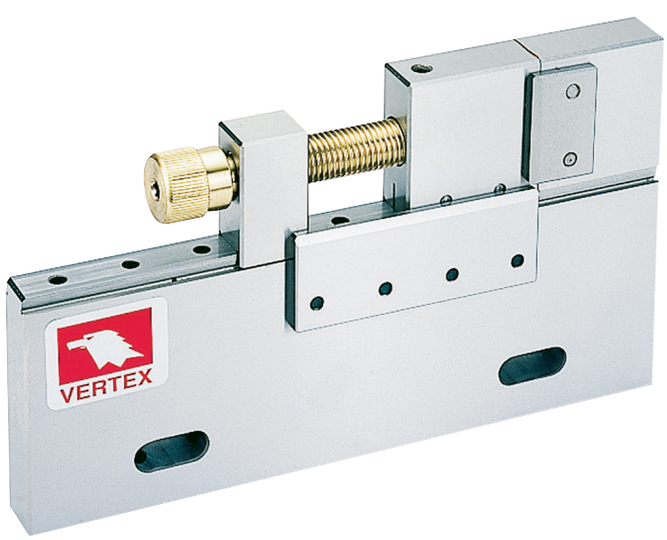

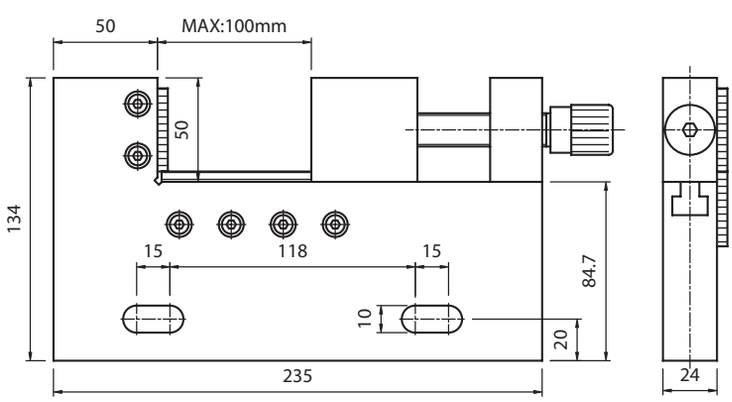

- Do not over lock.

※ Not 100% magnetic proof

PARALLELISM	±0.00 2mm / 100 mm
SQUARENESS	±0.002 mm / 100 mm

ORDER NO.	WEIGHT (kgs)	CODE NO.
VSTV-100W	4.88	2008-050

MAX.OPENING	100 mm
THICKNESS	24 mm
JAW DEEP	50 mm
N.W	4.88 kgs
MATERIAL	SUS420
HARDNESS	HRC 54º±2º